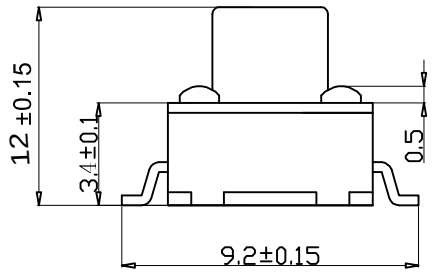

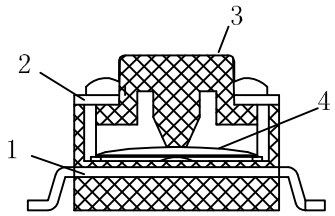

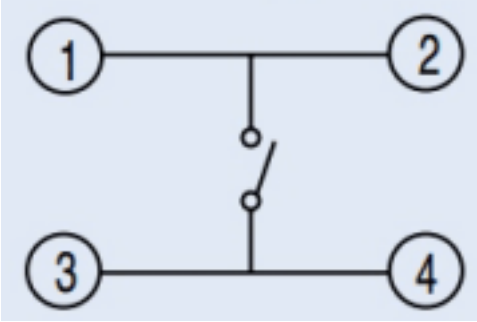

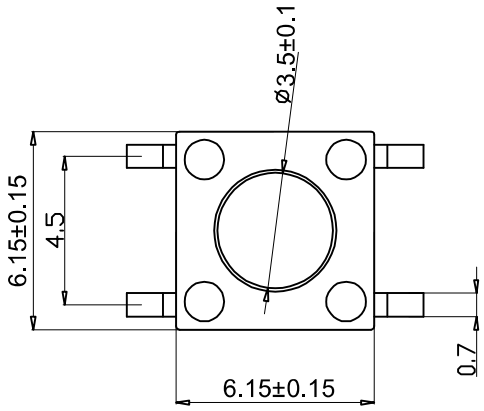

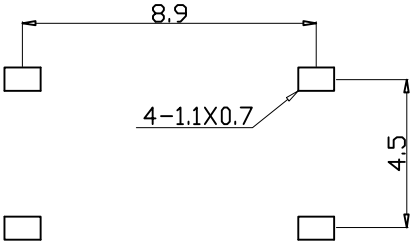

Specification of KFC Flip Switch

1. Contact; MechanicalContact
2. Rating; Dc12v50mA
3. Travel; 0.25+0.1M/M
4. OperaingForce; 260±50gf
5. ContactResistance; 30mΩMax
6. Life; 30.000CyclesMim

	DOCUMENT NUMBER 文件编号	
	DATE 日期	
SPECIFCATION 规格书	PAGE 页 数	共 3 页 第 1 页

MODEL NO.
产品名称: 轻触开关

ORGANIZER 编制		AUDITING 审核		AUTHORIZE 批准	

1.RATING (额 定 值) :DC 12V 50mA

2.ELECTRICAL CHARACTERISTICS(电气性能规格):

	ITEM 项目	TEST CONDITIONS 测试条件	PERFORMANCE 规格
2.1	CONTACT RESISTANCE 接触电阻	MEASURED AT SMALL CURRENT (100 mA OR LESS) 在微小电流（100mA）以下测试。	30mΩMAX 30毫欧以下。
2.2	INSULATION RESISTANCE 绝缘电阻	APPLY A VOLTAGE OF 100V DC FOR 1 MIN, TO FOLLOWING PORTIONS AFTER WHICH MEASUREMENT SHALL BE MADE. (1)BETWEEN BODY AND CONDUCTOR (2)BETWEEN CONDUCTORS NOT TO BE CONTACT. 输入100V DC 电压1分钟，按以下接触方法测试: (1)接触端子之间 (2)胶座与排脚之间	100MΩ MIN 100兆欧以上
2.3	DIELECTRIC STRENGTH 耐电压	AC 250V(50-60Hz)FOR 1 MIN TRIP CURRENT：0.5mA (1)BETWEEN TERMINALS. (2)BETWEEN INDIVIDUAL TERMINALS AND FRAME. 输入AC 250V(50-60Hz)电压，1分钟电流为0.5mA,按以下接触方式测试 （1）排脚相互之间 （2）排脚与外壳之间	WITHOUT DAMAGE TO PARTS ARCING OR BREAKDOWN ETC. 没有绝缘破坏等异常。

3.MECHANICAL CHARACTERISTICS (机械性能规格)

	ITEM 项目	TEST CONDITIONS 测试条件	PERFORMANCE 规格
3.1	OPERATING FORCE 操作力		PAY ONE'S RESPECTS TO THIRDLU PAGE 参见第三页
3.2	TERMINAL STRENGTH 端子强度	A STATIC LOAD OF (300gf)SHALL BE APPLIED TO THE TIP OF THE TERMINAL FOR 1 MIN IN ANY DIRECTION 在任意一个方向的先端加上（300gf）力度测试，时间1分钟。	ELECTRICAL CHARACTER ISTICS SHALL BE SATISFIED WITHOUT DAMAGE OR EXCESSIVE LOOSENESS OF ACTUATOR 端子没有裂开、松动等异常，满足机械、电性能要求
3.3	PRACTICAL TEMPERATURE RANGE 使用温度范围	-16℃~+60℃ 在-16℃~+60℃温度内使用	

	ITEM 项目	TEST CONDITIONS 测试条件	PERFORMANCE 规格
3.4	STANDARD ATMOSPHETC CONDITIONS 测试标准状态	UNLESS OTHERWISE SPECIFIED.THE STANDARD RANGE OF ATMOSPHERIC CONDITIONS FOR MAKING MEASUREMENTS AND TESTS ARE AS FOLLOWS: (1)AMBIENT TEMPERATURE:5℃ TO 35℃ (2)RELATIVE HUMIDITY:45% TO 85% (3)AIR PRESSURE :80Kpa TO 106Kpa 在没有指定的情况下测试温度、湿度、气压如下： （1）温度为5℃~35℃ （2）湿度为45%~85% （3）气压为80Kpa~106Kpa	
4.DURABILITY(耐久性)：			
4.1	LIFE TEST 寿命试验	WITHOUT LOAD: AN ACTUATOR SHALL BE SUBJECT TO 30,000 CYCLES AT A SPEED OF 40 CYCLES FOR 1 MIN. 无负荷： 操作者以每分钟40次的频率作30,000回无负荷测试	（1）CONTACT RESISTANCE SHALL BE 200mΩ MAX （2）MECHANICAL AND ELECTRICAL CHARACTERISTICS SHALL BE SATISFIED。 （1）接触电阻不能超过200mΩ （2）其它因满足机械、电性能要求
4.2	HEAT TEST 耐热试验	THE SWITCH SHALL BE STORED AT A TEMPERATURE OF 85±2℃ FOR 96 HOURS . AND THEN IT SHALL BE SUBJECTED TO THE CONTROLLED RECOVERY CONDITIONS FOR 1 HOUR AFTER WHICH MEASUREMENT SHALL BE MADE. 放置在温度85℃中测试96小时后，再放置正常室温中1小时后测定	THERE SHALL BE NO DAMAGE ON APPEARANCE. MECHANICAL AND ELECTRICAL CHARACTERISTICS SHALL BE SATISFIED. 外观无异常，满足机械、电性能要求
4.3	COLD TEST 耐冷试验	THE SWITCH SHALL BE STORED AT A TEMPERATURE OF -25±3℃ FOR 96 HOURS 。AND THEN IT SHALL BE SUBJECTED TO THE CONTROLLED RECOVER CONDITIONS FOR 1 HOURS AFTER WHICH MEASUREMENT SHALL BE MADE。 放置在温度-25±3℃中96小时，再放置常温中1小时后测定。	THERE SHALL BE NO DEFORMATION OR CRACKS IN MOLDED PART。 外观无异常，满足机械、电性能要求
4.4	HOMIDITY TEST 潮湿试验	THE SWITCH SHALL BE STORED AT A TEMPERATURE OF 40±2℃ AND A HUMIFITY OF 90% TO 96% FOR 96 HOURS . THEN THE SWITCH SHALL BE MAINTAINED AT STANDARD ATMOSPHERIC CONDITION FOR 1 HR FOR OTHER PROCEDURES BE MADE. 放置40±2℃相对湿度为90~96%环境中96小时后,再放置常温中1小时后测定。	

	ITEM 项目	TEST CONDITIONS 测试条件	PERFORMANCE 规格
4.5	SOLDERING CONDITIONS 焊锡条件	HAND SOLDERING: (1)DEVICE:SOLDER IRON A.260℃ MAX . 3SEC MAX B.260℃ MAX . 5SEC MAX (2)REFLOW SOLDERING 手焊 (1)工具：烙铁 A.260℃ MAX . 3SEC MAX 不能对焊脚加压 B.260℃ MAX . 5SEC MAX (2)回流焊 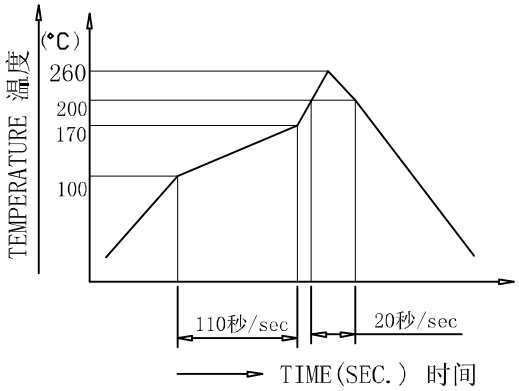 	THERE SHALL BE NO DEFORMATION OR CRACKS IN MOLDED PART。 外观无异常，满足机械、电性能要求

OPERATING FORCE 操作力	
260±50G	